BEVERAGE-AIR

Project: _____	AIA#
Item: _____	
Location: _____	SIS#
Approved:	

SIDE MOUNT UNDERCOUNTER REFRIGERATOR

MODEL: UCR46AHC

UCR46AHC Solid Door Refrigerator
Hydrocarbon Series

3 Year Parts/Labor Warranty
Additional 4 Year Compressor Warranty

CABINET CONSTRUCTION

- Stainless steel front, sides, top, door and grille (galvanized steel back & bottom)
- Interior liner is made of corrosion resistant aluminum
- Full electronic control
- Undercounter feature a 1/2" thick sub-top
- Interior thermometer is standard
- Self-closing doors with 120˚ stay-open feature
- Magnetic gasket attached to each door for positive seal
- 6" Casters, two (2) with brakes standard
- Two epoxy-coated steel wire shelves
- Field-reversible door

OPTIONS & ACCESSORIES

- Stainless steel back
- Stainless steel interior
- Additional shelves
- Shelf clips
- Right or left hinged door
- Door locks
- Wire shelf divider
- 3" Casters
- 6" legs (stainless steel, black or seismic/flange)
- Low profile casters
- Roller kit
- Remote option* (see note on back on page)

REFRIGERATION SYSTEM

- Uses environmentally friendly, energy efficient R290 refrigerant, and meets all regulatory requirements for CARB, SNAP, DOE & more
- Adaptive defrost
- Epoxy coated evaporator coil
- Refrigerators capable of maintaining product temperature between 36ºF and 38ºF

UCR46AHC UNDERCOUNTER REFRIGERATOR

Please verify qualifying units by visiting:
www.energystar.gov/cfs

3779 Champion Blvd., Winston-Salem, NC 27105
1-888-845-9800 Fax: 1-336-245-6453
Beverage-Air.com Sales@bevair.com

BEVERAGE-AIR

Undercounter Refrigerator-Side Mount
Models: UCR46AHC

MODEL	UCR46AHC
EXTERNAL DIMENSIONAL DATA	
Width Overall	46”
Depth Overall with Handle & Bumper	34 3/4”
Height Overall with 6” Casters	34 ½”
Number of Doors	1
Depth with Door Open 90°	55 ⅛”
Door Opening	21 ½” x 23 ⅜”
INTERNAL DIMENSIONAL DATA	
NET Capacity (cubic ft.)	10.8
Internal Width Overall (in)	42”
Internal Depth Overall (in)	26”
Internal Height Overall (in)	24 ¾”
Number of Shelves	2
ELECTRICAL DATA	
Full Load Amperes	3.0
REFRIGERATION DATA	
Horsepower	1/5
Capacity (BTU/Hr)	1350
SHIPPING DATA	
Gross Weight - Crated	281 lbs
Height - Crated	40”
Width - Crated	48”
Depth - Crated	37”

*NOTE: Remote units are field wired and come with 6” legs.
Refrigerant must be specified at time of order.

Model Views

Required Clearance: 3 3/16” bottom & 2” rear

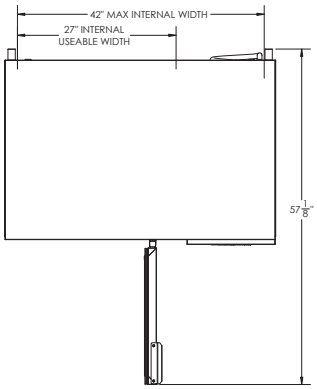

PLAN VIEW

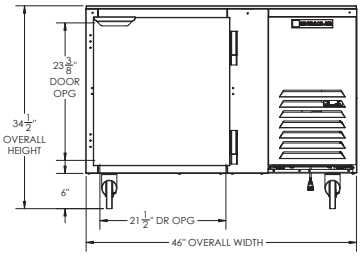

ELEVATION VIEW

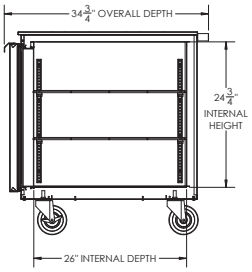

SIDE VIEW

*ELECTRICAL CONNECTION

115/60/1
NEMA 5-15P

Unit pre-wired at factory and include 8’ long cord and plug set.

3779 Champion Blvd., Winston-Salem, NC 27105 1-888-845-9800 Fax: 1-336-245-6453 Beverage-Air.com Sales@bevair.com

an Ali Group Company

The Spirit of Excellence